SHOP DETECTORS
TEL : +1 206-401-9788
WEB : https://shopdetectors.com/
EMAIL : contact@shopdetectors.com

AJAX

DETECTION TECHNOLOGY

User Manual

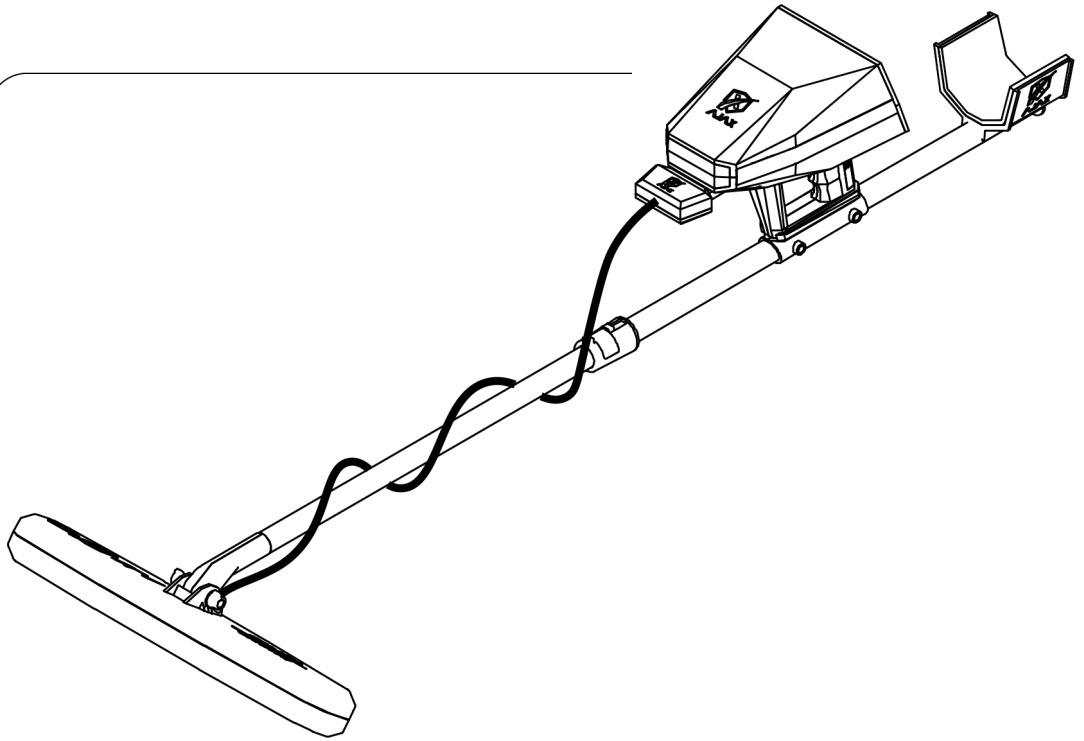

AJAX
DETECTION TECHNOLOGY

gamma

USER MANUAL

Copyright C 2018 AJAX DETECTION TECHNOLOGY LTD. All Rights Reserved.

No part of this manual, including the products and software described in it, may be reproduced, transmitted, transcribed, stored in a retrieval system, or translated into any language in any form or by any means, except documentation kept by the purchaser for backup purposes, without the express written permission of AJAX DETECTION TECHNOLOGY LTD. (“AJAX”).

Product warranty or service will not be extended if: (1) the product is repaired, modified or altered, unless such repair, modification or alteration is authorized in writing by AJAX: or (2) the serial number of the product is defaced or missing.

AJAX PROVIDES THIS MANUAL “AS IS” WITHOUT WARRANTY OF ANY KIND, EITHER EXPRESS OR IMPLIED, INCLUDING BUT NOT LIMITED TO THE IMPLIED WARRANTIES FOR CONDITIONS OF MERCHANTABILITY OR FITNESS FOR A PARTICULAR PURPOSE. IN NO EVENT SHALL AJAX, ITS DIRECTORS, OFFICERS, EMPLOYEES OR AGENTS BE LIABLE FOR ANY INDIRECT, SPECIAL, INCIDENTAL, OR CONSEQUENTIAL DAMAGES (INCLUDING DAMAGES FOR LOSS OF PROFITS, LOSS OF BUSINESS, LOSS OF USE OR DATA, INTERRUPTION OF BUSINESS AND THE LIKE), EVEN IF AJAX HAS BEEN ADVISED OF THE POSSIBILITY OF SUCH DAMAGES ARISING FROM ANY DEFECT OR ERROR IN THIS MANUAL OR PRODUCT.

SPECIFICATIONS AND INFORMATION CONTAINED IN THIS MANUAL ARE FURNISHED FOR INFORMATIONAL USE ONLY, AND ARE SUBJECT TO CHANGE AT ANY TIME WITHOUT NOTICE, AND SHOULD NOT BE CONSTRUED AS A COMMITMENT BY AJAX. AJAX ASSUMES NO RESPONSIBILITY OR LIABILITY FOR ANY ERRORS OR INACCURACIES THAT MAY APPEAR IN THIS MANUAL, INCLUDING THE PRODUCTS AND SOFTWARE DESCRIBED IN IT.

Products and corporate names appearing in this manual may or may not be registered trademarks or copyrights of their respective companies, and are used only for identification explanation and to the owner’s benefit, without intent to infringe.

Contents

Safety Information 5
Where to find more information 5
Introduction 6
Specification Summary 7
Package Contents 8
Overview 10
Hard Keys 11
Battery Assembly 13
Assembly 14
    Imaging Scanner Assembly 15
    Gradio Smart Assembly 16
Initial setup 17
User Interface 18
Settings 19
    Language 19
    Time and Date 19
    Display 20
    Sound 21
    Power Mode 22
    Storage 23
    Bluetooth 24
    Info 25
    Security 26
    Reset 27
Quick Settings 28

3D Ground Scan 29
Device:. 30
Tablet: 35
Tablet Pairing:. 36
Gradio Smart 40
Live Scan 44
Battery 46
Charging the battery 46
Precautions for operating environment 46
Battery charging tips and precautions 47
Contact Information 48
WEEE (Waste Electrical and Electronic Equipment) Statement 50

Safety Information

The components included in this package are prone to damage from electrostatic discharge [ESD]. Please adhere to the following instructions to ensure successful device assembly.

Ensure that all components are securely connected. Loose connections may cause the device to not recognize a component or fail to start.

Hold the device firmly when assembling or operating.

It is recommended to discharge yourself of static electricity by touching another metal object before handling the device.

Store the device in an electrostatic free environment whenever the device is not in use.

Do not assemble or operate the device before reading the user manual. This might cause permanent damage to the components as well as injury to the user.

If you need help during installation step, please consult support via phone or Online help-desk.

Always turn off the device before storing the device.

Keep this user manual for future reference.

Keep this device away from humidity.

Make sure that your electrical outlet provides the same voltage as is indicated on the Charger before connecting to the electrical outlet.

All cautions and warning on the device and in the user manual should be noted.

If any of the following situations arises, get the device checked by service personnel:
Liquid has penetrated into the device.
The device has been exposed to moisture.
The device does not work well or you can not get it work according to user manual.
The device has been dropped or damaged.
The device has obvious sign of breakage.

Do not leave the device in an environment above 60°C (140°F), it may damage the device.

Where to find more information

Refer to the following sources for additional information and for product and software updates.

1. **AJAX websites:**
The AJAX website provides updated information on AJAX hardware and software products. Refer to the AJAX contact information.

2. **Optional documentation:**
Your product package may include optional documentation, such as warranty fliers, that may have been added by your dealer. Theses documents are not part of the standard package.

Introduction

Gamma has the latest advanced detection and scanning systems to detect gold, metals and voids.

This device works on a new techniques and modern electronic foundations that offer new concepts and dimensions in the world of ground imaging devices.

A multi-tasking gamma device that allows users to do geological exploration and surveying in its wide ranges, with all tools and applications needed to complete the searches successfully.

This device was provided with 5-inch high-resolution colorful screen, it allows you to work with advanced professional functions and programs to detect underground targets with full control of the scanning properties and your path exploration journey until you reach the desired target.

This device can be used through 3 different detection and exploration systems
1- Gradiosmart system
2- Live Scan
3- 3D Ground Scanner

Thank you for purchasing the AJAX GAMMA detection device.
This quick Start section provides demonstration about how to assemble your device .
Some of the installations also provide video demonstrations. Please link to the URL to watch it with the web browser on your phone or tablet. You may have even link to the URL by scanning the QR code.

Specification Summary

AJAX Detection Technology has been working on an innovation in detection field to expand the horizons and opportunities for new experience leading to efficient work-flow.

Research Principle	Multi-detection systems and functions, contains 3 optional systems
Operating Principle	Processing data and digital signals and converting them to visual and audible results
Processor Architecture	MIPS 32
Operation processor	M4K™ Core
Display Screen	TFT Color LCD, 800 x 480 WVGA, 16-bit color depth
Battery	7.4 volts, 3300 mAh
Power Rating	400 mA
Battery Endurance	Typical usage time 10 hours*
Power Adapter	240-100 VAC / 15 VDC - EU Plug
Storage	1 GB / it can save to 1000 scans.
Sound	High quality sounds, 32 KBIT/S, MP3
Notifications	Sound and tactile feedback configurable in the settings menu for
Bluetooth	2.4 GHz, sensitivity up to -80dBm.
Languages	Multilingual User Interface with support for 8 languages.
Date and Time	Real Time Clock could be set manually or Automatically via GPS time.
Login Restriction	Configurable PIN.
Dimensions	145x45x24 cm
Overall Dimensions	88x52x20 cm
Package Total Weight	5 kg
Assembly Weight	1 Kg (~2 lbs) ; 1.7 Kg (~3.75 lbs)
Operating temperature	From -10° C to 60° C (14° F - 140° F)
Storage temperature	From -10° C to 80° C (14° F - 176° F)
Humidity	Could be stored and operated at relative humidity level up to 90%.

**- Typical battery endurance is subjected to battery life degradation and environmental factors.*

Package Contents

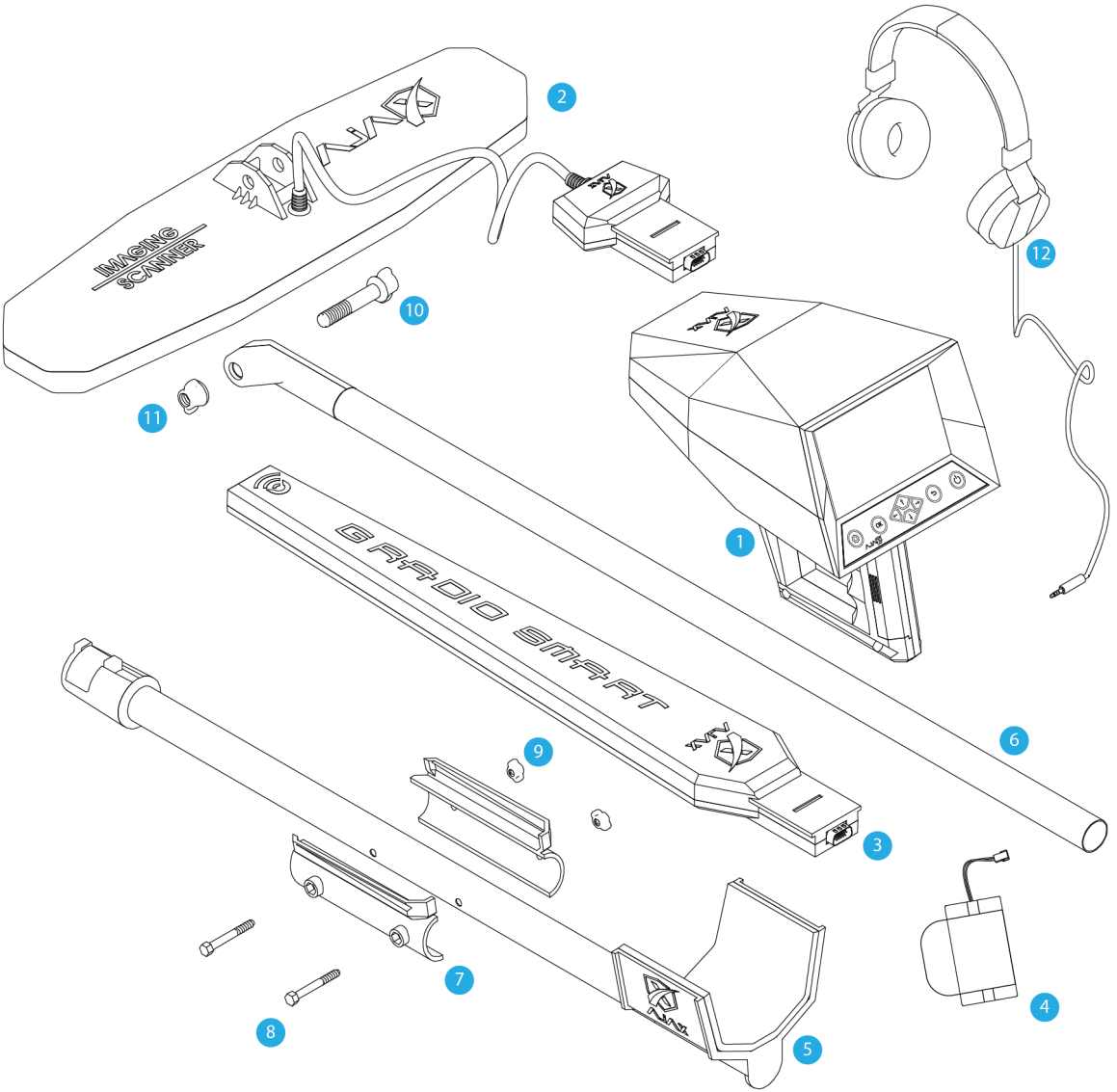

Package Contents

Check your device package for the following items:

1	Main Unit
2	Imaging Scanner
3	Gradio Smart Sensor
4	Battery Pack
5	Carrying Pole
6	Extension Pole
7	Device Clamp
8	Clamp Bolt x2
9	Clamp Nut x2
10	Bolt
11	Nut
12	Headphones

- The items supplied with the device and any available accessories may vary depending on the region or service provider.
- The supplied items are designed only for this device and may not be compatible with other devices.
- Appearances and specifications are subject to change without prior notice.
- You can purchase additional accessories from your local AJAX retailer. Make sure they are compatible with the device before purchase.
- Use only AJAX-approved accessories. Using unapproved accessories may cause the performance problems and malfunctions that are not covered by the warranty.
- Availability of all accessories is subject to change depending entirely on manufacturing companies. For more information about available accessories, go to the AJAX website.

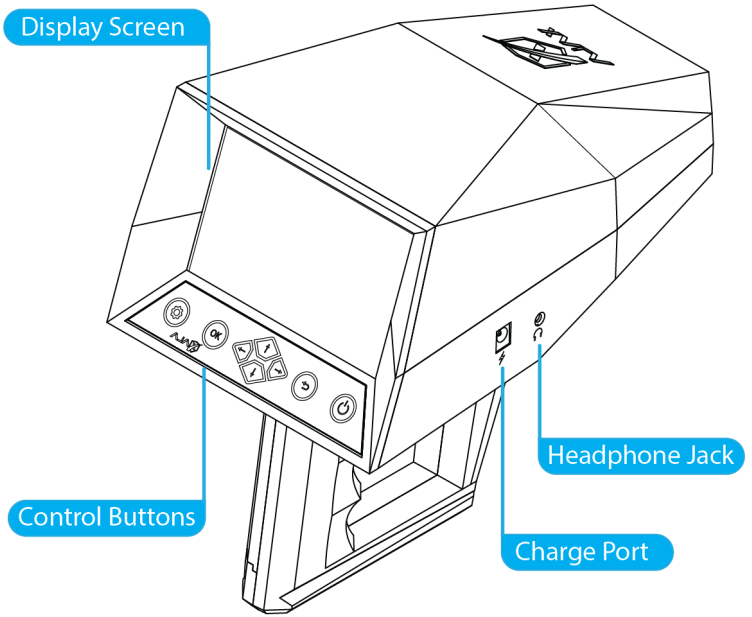
Display Screen
Control Buttons
Charge Port
Headphone Jack

Main Unit

Hard Keys

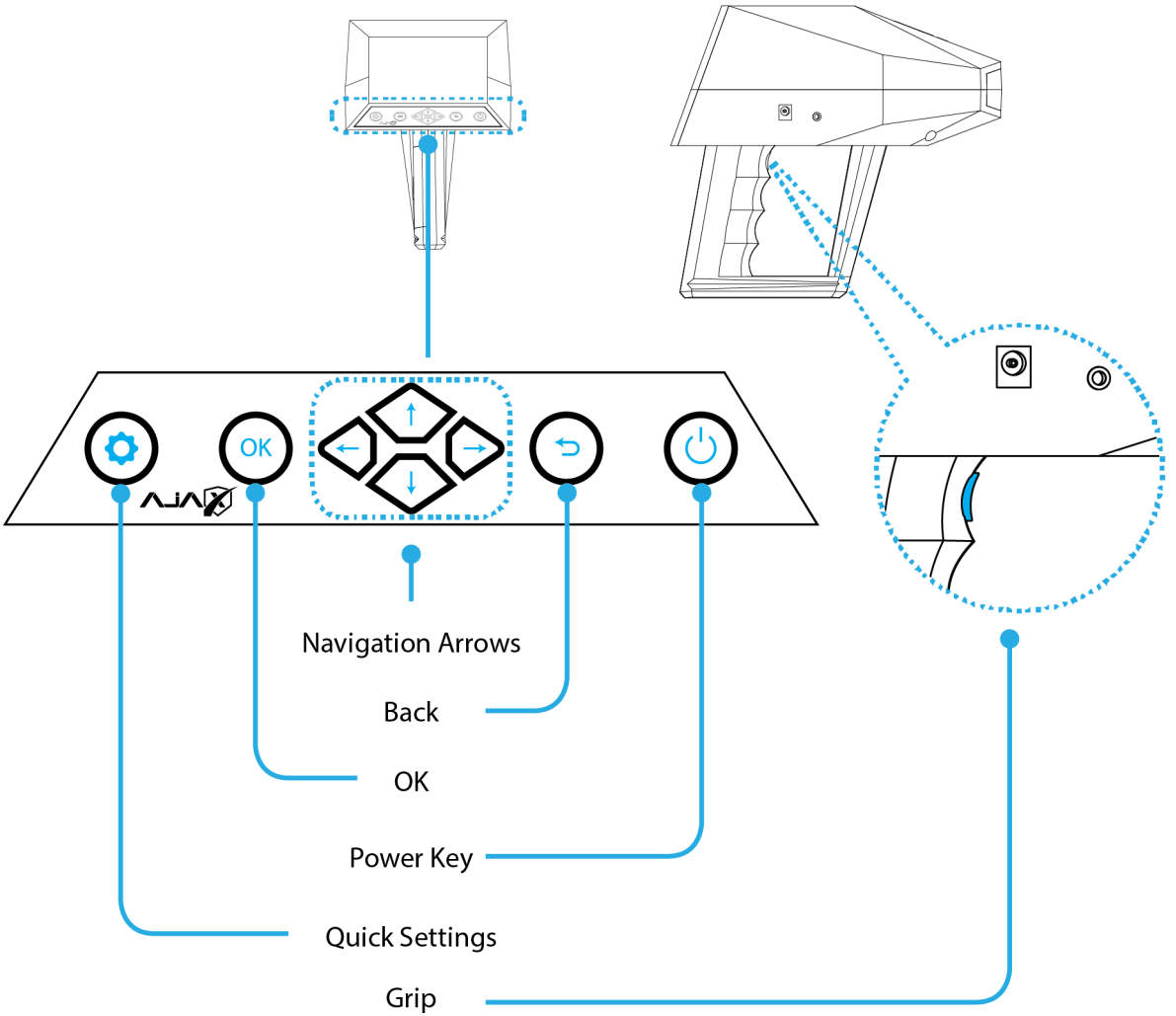

Hard Keys

Key	Function
Power	• Press and hold to turn the device on or off. • Press to turn on or lock the screen.
OK	• Confirm/enter the selected option.
Back	• Go to previous menu, cancel.
Navigation Keys	• Navigation through the device interface.
Quick Settings	• Press to drop the quick settings menu.
Grip Key	• Multi-purposed key for ease of access while searching.

Turning the device on and off
Press and hold the Power key for a few seconds to turn on the device.
When you turn on your device for the first time or after performing a data reset, follow the on-screen
Instructions to set up your device.
To turn off the device, press and hold the Power key, and then tap Power off.
Follow all posted warnings and directions from authorized personnel in areas where
The use of wireless devices is restricted, such as airplanes and hospitals.

Battery Assembly

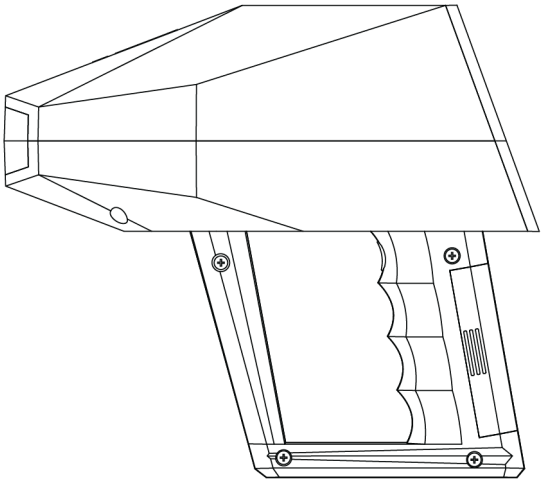

figure 1 -Battery Assembly

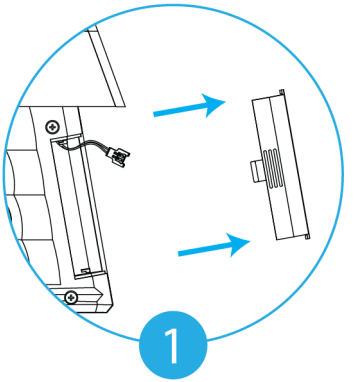

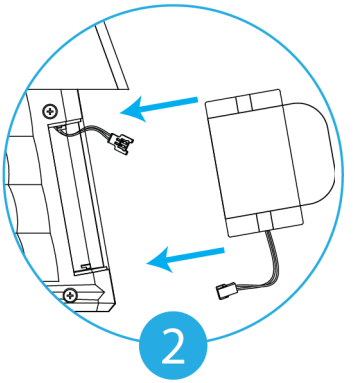

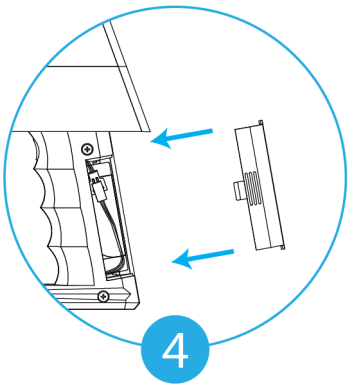

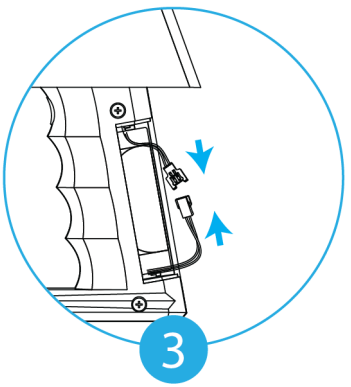

1- Press firmly at the ridges and push outwards to remove the battery cover.
2- Insert the battery pack inside the compartment.
3- Connect the wires and make sure they are securely attached.
4- Insert the connector inside the compartment and put the cover back on the grip.

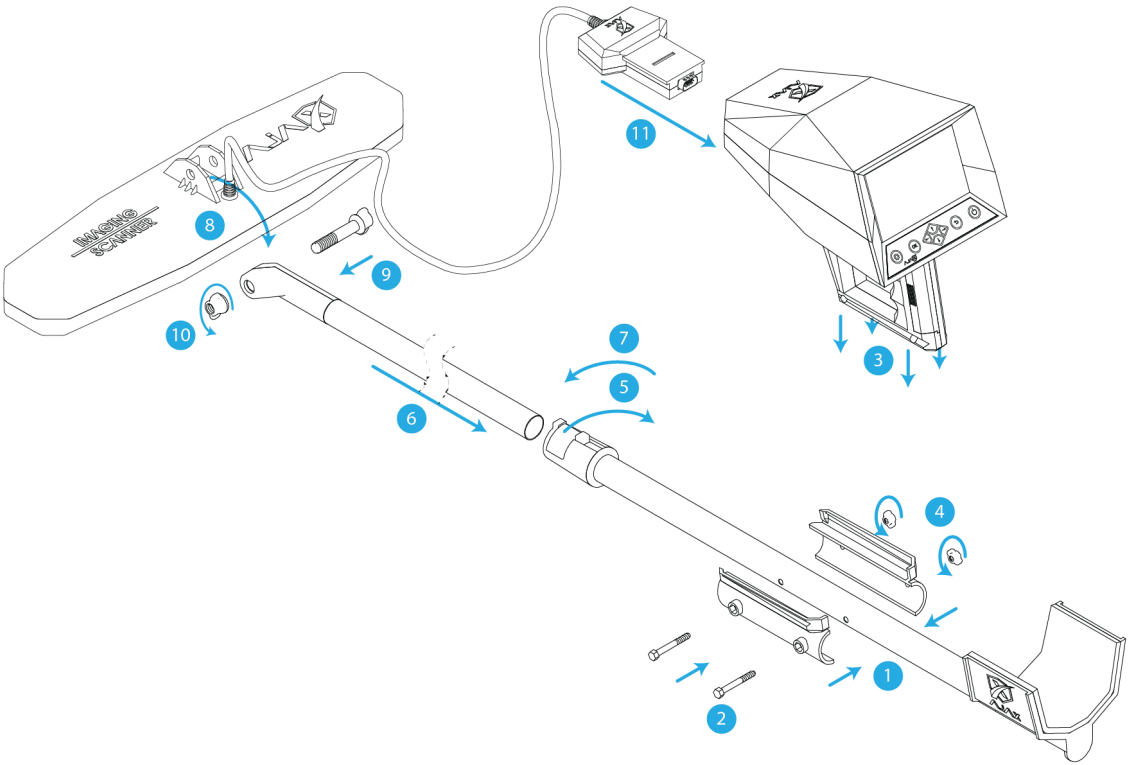

figure 2 -Imaging Scanner Assembly

Imaging Scanner Assembly

1- Align the clamp with the holes on the pole.

2- Insert the screws into the clamp.

3- Put the Main Unit inside the clamp.

4- Put the nuts on the screws and tighten them.

5- Unlatch the pole lock.

6- Insert the second pole and adjust the length.

7- Lock the latch back in securely.

8- Align the Imaging Scanner with the second pole tip.

9- Insert the screw.

10- Adjust the Imaging Scanner angle and tighten the nut.

11- Wrap the cable around the second pole and insert the connection module in the front of the Main Unit.

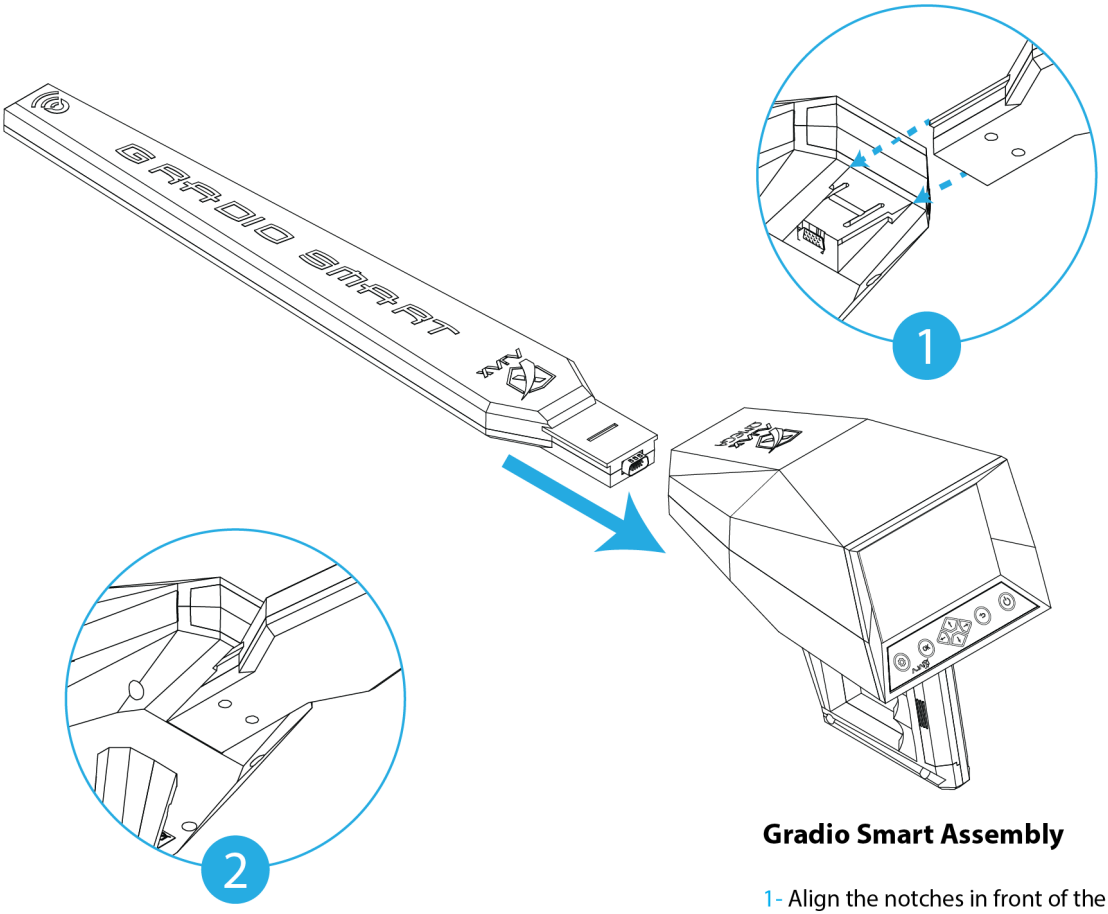

figure 3 -Gradio Smart Assembly

Gradio Smart Assembly

1- Align the notches in front of the device with the back of the Gradio Smart Module.

2- Press firmly until the Module is secured back into the device.

Initial setup

When you turn on your device for the first time or after performing a data reset, follow the on-screen instructions to set up your device.

- The initial setup procedures may vary depending on the device's software and your region.

1 Turn on the device.
Press and hold to turn the device on

2 Select a language.
Select your preferred device language and select OK.

3 Set Time and Date.
Press ◁ ▷ to move, and △ ▽ to change values.

After setting the parameters the Main Menu will show on the display.

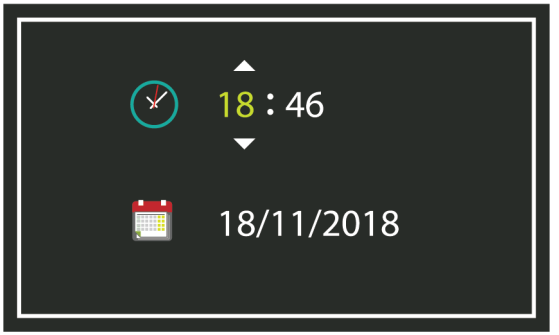

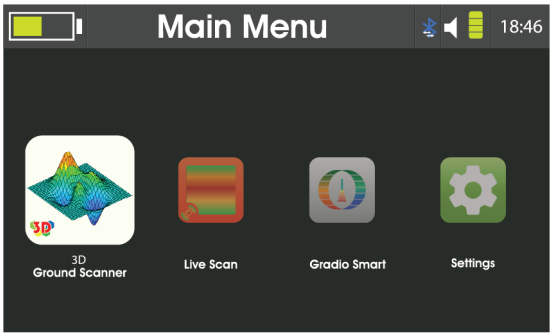

Note:
The time format is 24h (hh:mm) e.g. 19:42
The date format is day/month/year (DD/MM/yyyy) e.g. 30/03/2018.

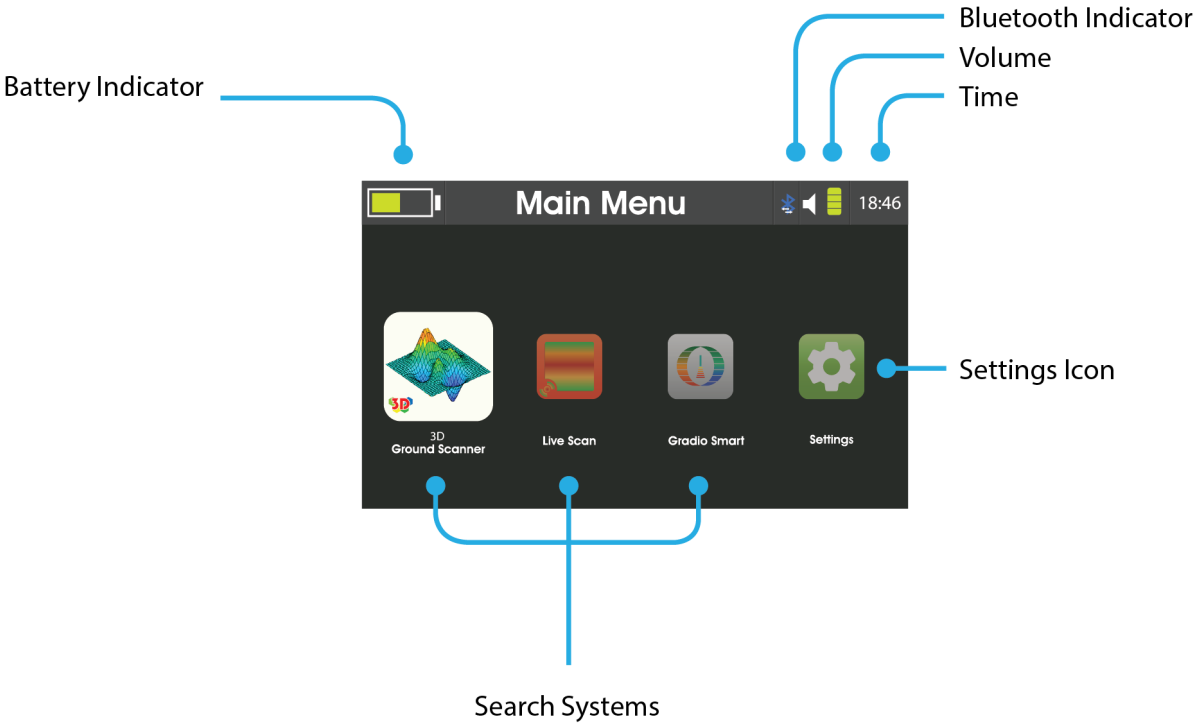
Bluetooth Indicator
Volume
Time
Battery Indicator
Main Menu
18:46
3D
Ground Scanner
Live Scan
Gradio Smart
Settings
Settings Icon
Search Systems

Language

The device supports 8 different languages for the interface (English, French, German, Spanish, Italian, Russian, Turkish and Arabic)

Select language and press OK to set the language to the device.

Time and Date

Press ◁ ▷ to move, and △ ▽ to change values.

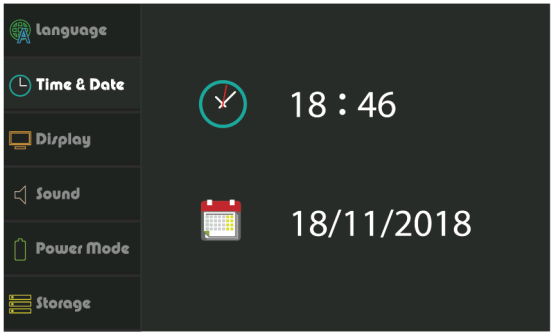

Note:
The time format is 24h (hh:mm) e.g. 19:42
The date format is day/month/year (DD/MM/yyyy) e.g. 30/03/2019.

Display

Brightness:

Move the brightness slider to adjust the brightness.
The value is adjustable from 0 to 100% brightness in a 1% increments.
Maximum brightness is 250 nits.

Sleep Mode:

Set the automatic dimming for the brightness in order to preserve power.

This setting could be set to 15, 30, 45 or 60 seconds, or it could be turn off completely.

Sound

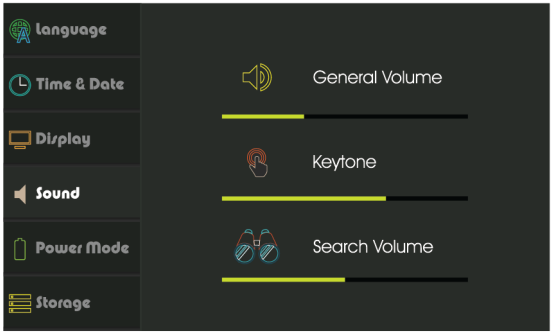

Press ↑ ↓ to move the cursor, press ← → to change values, and press OK to change mode.

I- General Volume:

This setting controls the volume for the notifications, errors, and the starting audio.

To set volume press ← →, and press OK to change mode.

1- General mode
The device will respond with vibration in addition to sound.

2- Silent mode
The device will not respond with any type of feedback

3- Vibration mode
The device will only respond with vibration feedback

4- Normal mode
The device will only respond with sound feedback

II- Key-tone:

This setting controls the volume for the feedback of pressing the buttons.

To set volume press ← →.

III- Search Volume:

This setting controls the volume for search results and readings.

To set volume press ← →.

Note:
The key-tone volume and search volume are not set by the general volume.

Power Mode

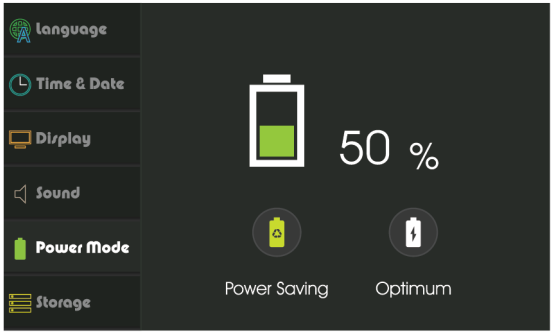

This menu shows the power state of the device and current power mode, to change power mode move the cursor ◁ ▷ and press OK to confirm.

I- Power Saving mode:

This mode saves power by disabling idle modules in order to preserve power for long search operations.

II- Optimum Mode:

This mode will set the device with all modules on for a steady performance operation.

Storage

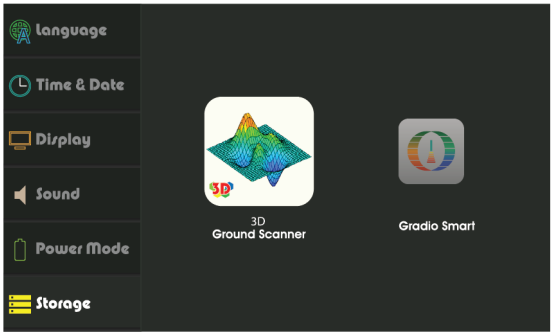

This menu shows the previously saved search results.

The user can view or delete the results.

Press ◁ ▷ to select which system results to show.

Then the results list shows the saved searches

Navigate the list and press OK to view or delete the highlighted result.

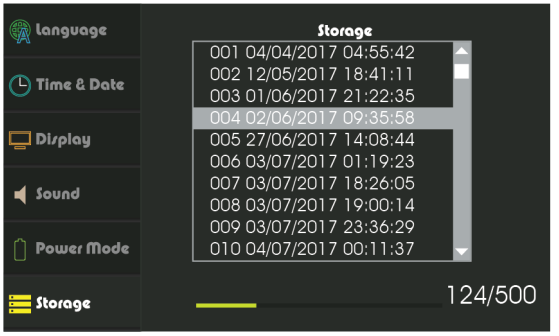

Bluetooth

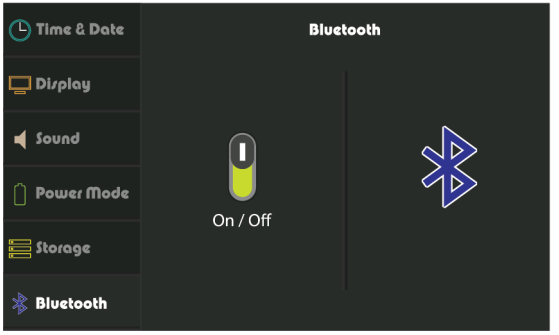

This menu shows Bluetooth state.

To change state press ◁ ▷ then OK or △ to activate .
To change state navigate to the toggle and press OK, △ to activate or ▽ to deactivate.

Info

This menu shows:

- Device Version
- Software Version
- Model
- Uptime

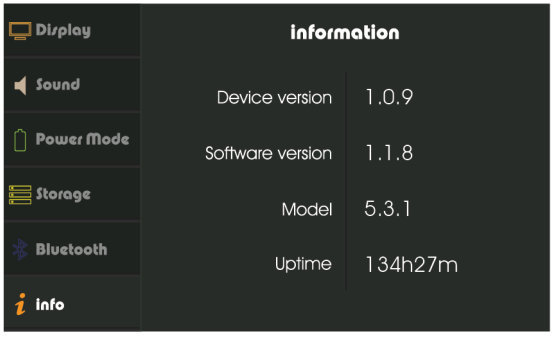

Security

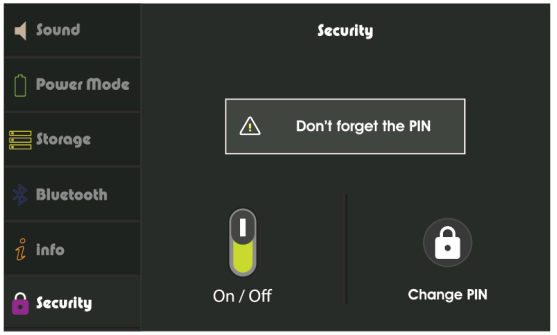

This menu shows Secure Start state.

To change state press ◁ ▷ then OK or △ to activate .
To change state navigate to the toggle and press OK, △ to activate or ▽ to deactivate.

Enter a new PIN then press ↵.
Enter the PIN again for confirmation.

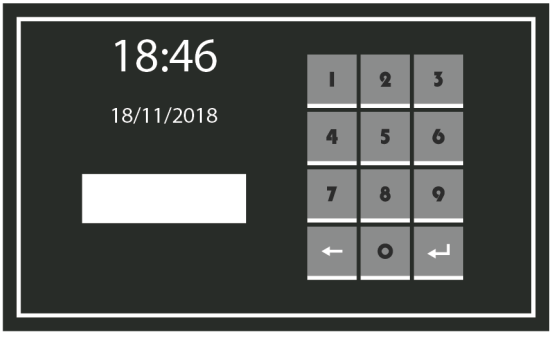

Reset

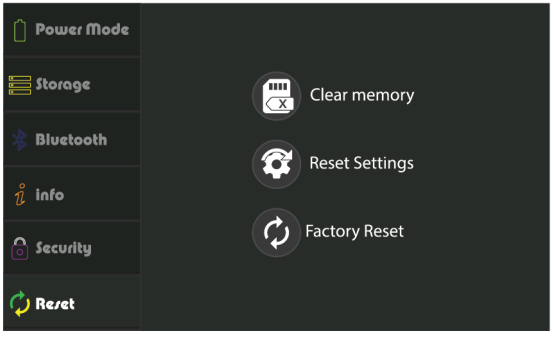

This menu shows the reinitializing options.

I- Clear Memory:

This option erase all saved results from memory.

II- Reset settings:

This option resets all the settings to default values.

III- Factory Reset:

This option resets all the settings to default values and erase all saved results.

Quick Settings

To access the quick settings menu, press ⚙ key on the far left of the keypad.

When pressed, the title in the status bar will be replaced with the settings icons.

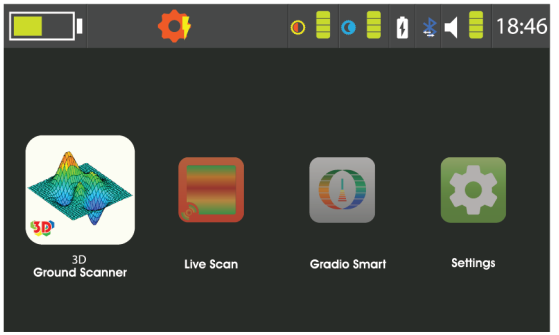

Press ◁ ▷ to navigate through the options.

Display Brightness. It can be set by pressing ↓ to decrease or ↑ to increase the brightness intensity.

Sleep mode. It can be set to 5 settings 15, 30, 45 or 60 seconds or be set off completely.

Power mode. It can be set by pressing OK to change the power mode into:

Optimum mode

Power save mode

Sound. Press ↑ to increase or ↓ to decrease the current value, while pressing OK will change the sound value for the device keys or the search.

"18:46" Time. Set the current time by pressing ↑ or ↓.

Note: To exit the quick settings menu press ⚙ or ↩.
The quick settings menu is accessible in every menu with a visible status bar.

3D Ground Scan

Select 3D Ground Scanner from the main menu and make sure the device is assembled as shown in *"figure 2 -Imaging Scanner Assembly" on page 15*.

Select the viewing scope:
Device or ***Tablet***

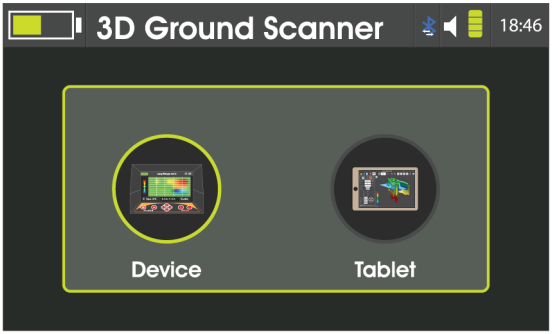

Device:

Set the scan parameters

Scan Mode:

Automatic Mode: This mode takes a reading every one second without the need to press the grip button.

Manual Mode: This mode takes a reading with each press on the grip button.

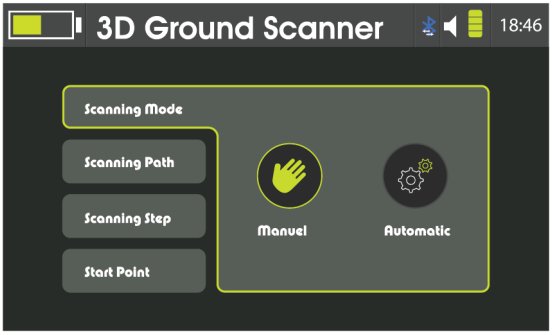

Scan Path:

One Direction : The scan steps start from the bottom of the scan grid going up for every column.

Alternative: The scan steps change direction after each column scan is done.

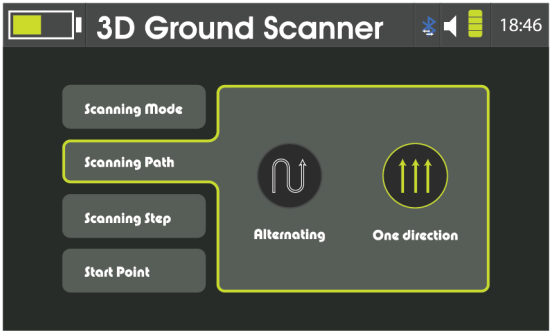

Scan Step:
Set the scan grid parameters
Columns: The scan steps in parallel with the device during the scan process. The columns could be set to 2-10.
Rows: The scan steps that are perpendicular with the device during the scan process. The rows could be set to 2-20.
Start Point:
Sets the start point of the scanning process left or right. The start point is always located in the bottom of the scanning grid.

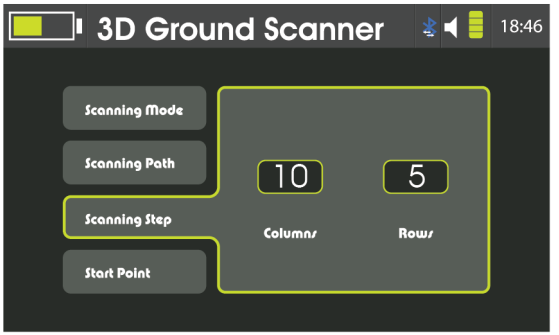

Note:
It's highly recommended to keep the scanning cell size a 60x30 cm ~(2ftx1ft)

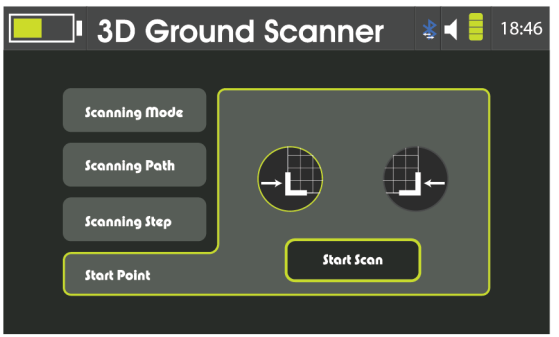

Once all the scan parameters are set, perform a balance operation. To balance the device, hold it while the Imaging Scanner is 10-15 cm away from the ground and press the grip key while moving over a neutral area until the bar is filled on the interface.

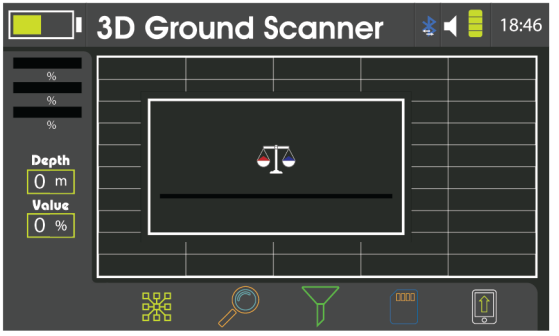

Position the device at the start point of the scan are and press the grip key to start. Each reading fills a cell on the interface.
Once the column is finished proceed to the next one according to the selected scan path. When the scan area is fully covered the device will process the data.

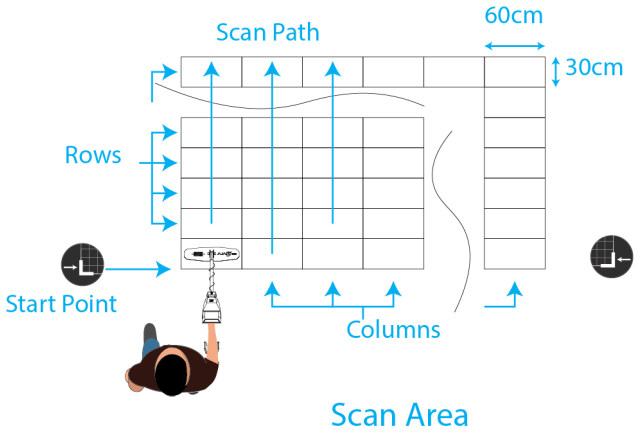

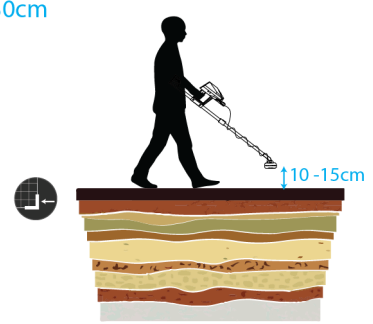

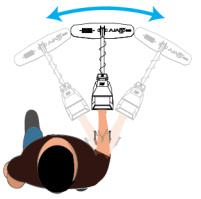

3D Ground Scan

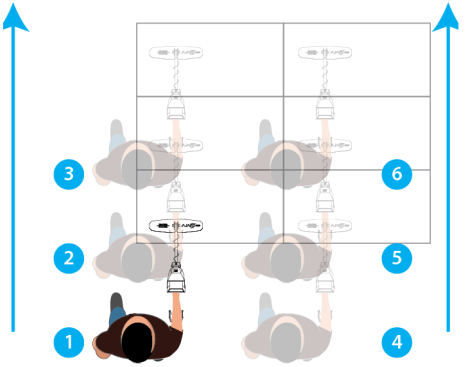

One Direction
Scan Path

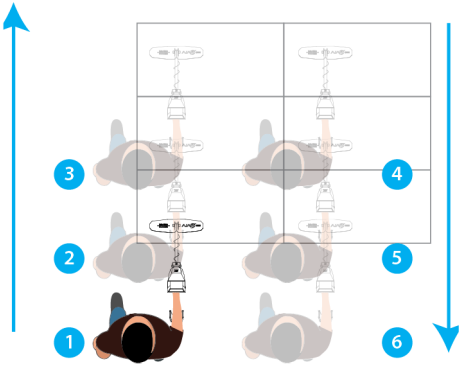

Alternating
Scan Path

Note:
The Device orientation must be sustained regardless of the Scan Path.

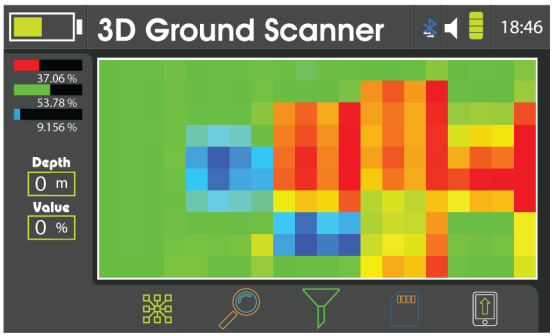

The Scanning Interface consists of:

The scanning grid: The grid shows the columns, rows, Scan Path and the current readings on display.
Processing Indicator: It shows state of image processing.
Filtering: It enables isolating or hiding a spectrum of readings.
Details: It enables the user to review a single cell details and reading values.
Connectivity: It shows current state of connection for the Imaging Scanner module.
Save: It saves the scan result into the memory for future review.
Upload: Sends the scan data to Ajax Analyzer App for interactive 3D representation of the scan.

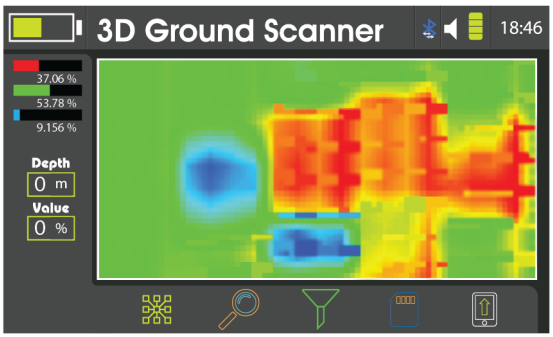

Note:
Make sure that the Bluetooth is activated before uploading the data to the AJAX Analyzer App. Bluetooth can be activated via Quick Settings.

Tablet:

Set the scan parameters

Scan Mode, Scan Path, Scan Step and Start point are all the same is previously explained.

Once all the parameters are set and ready to go.

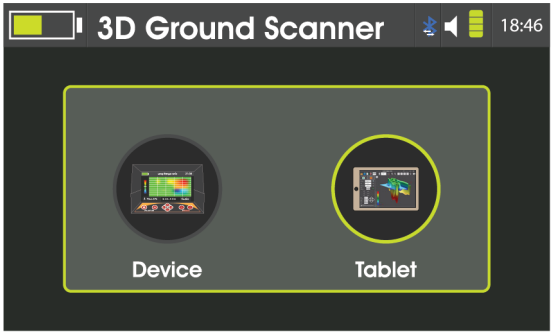

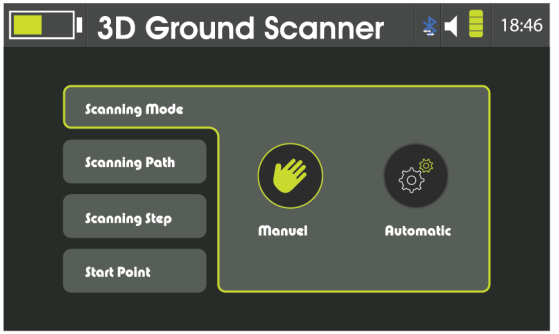

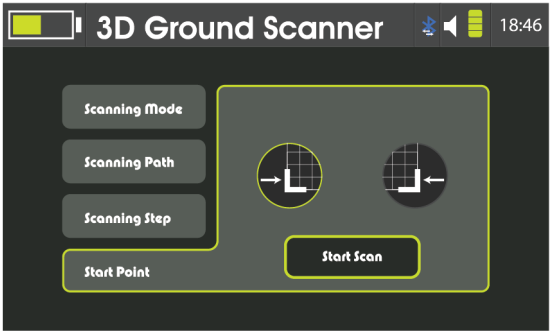

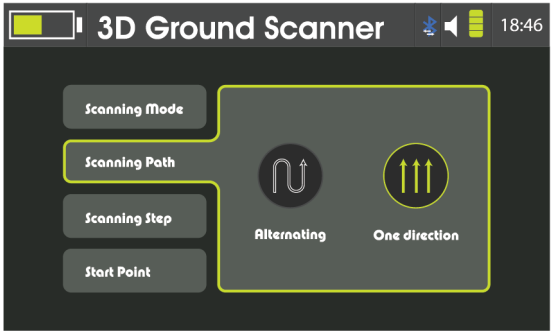

Tablet Pairing:

Once the ground balance process is over, wait for the data to be processed and turn on the Bluetooth if it is off.

A window prompting the connection to the tablet shows next.
On the tablet go to settings.
Go to Connections.
Turn ON Bluetooth.

If it is the first time connecting the device to the tablet, a pairing process is needed.

Search for nearby devices and wait for the device to be listed in the available devices list.

Tap on “AJAX” to pair it
Enter 1234 as a PIN. Code

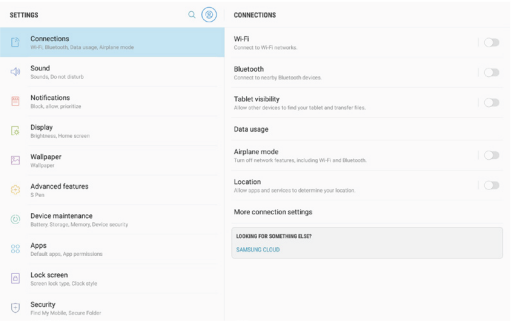

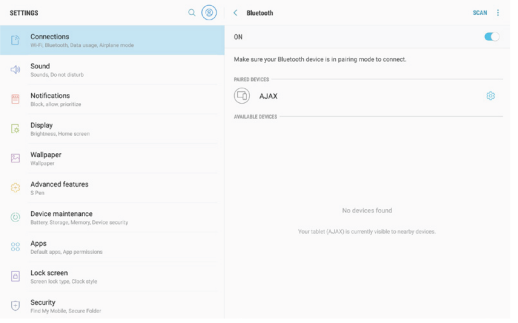

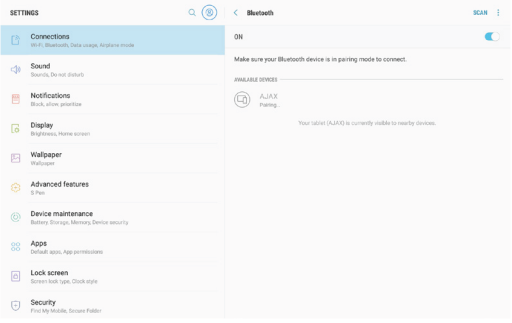

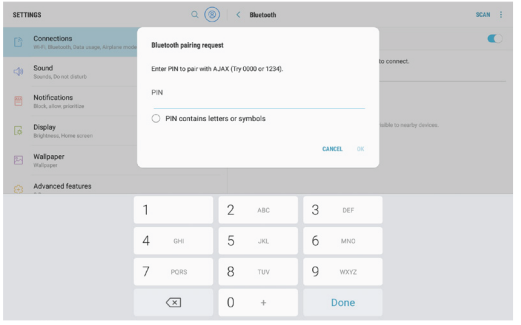

3D Ground Scan

Once the pairing process is done successfully launch the Ajax Analyzer app.

Tap the connect button at the upper-left corner and wait for the connection to be established.

A window prompting the start of the scan shows.

Start the scan process with the selected parameters as explained earlier in the device scan.

When the scan process is finished, enter a name for the scan at the upper-right box and tap save.

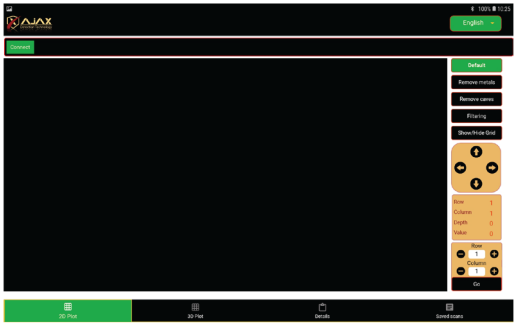

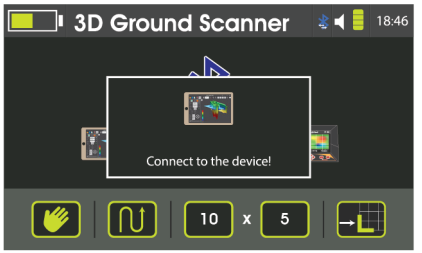

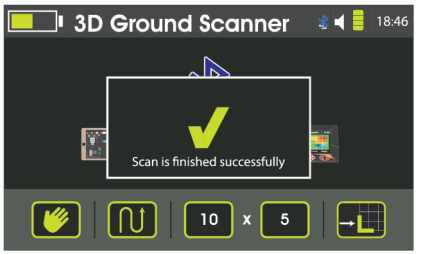

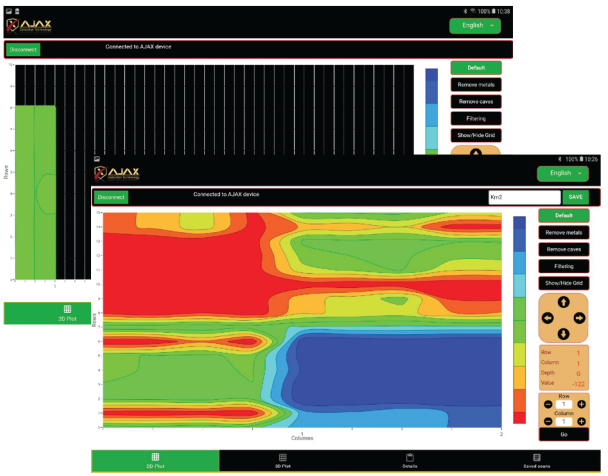

3D Ground Scan

1- Specific scan values can be filtered out of the display by the buttons on the right.

Default: shows the full scan date.
Remove Metal shows the scan data and filters out the metal values.
Remove Caves: Shows the scan data and filters out the cavity values.

2- Filtering: The visualization can be smoothed using the Filtering feature to show a gradient view of the scan.

3- To show a specific cell value, use the arrows to locate it. The cell values are shown on the right.

4- Direct input for the cell position can also be made at the bottom of the right, Enter the row and column then tap go to locate the cell directly.

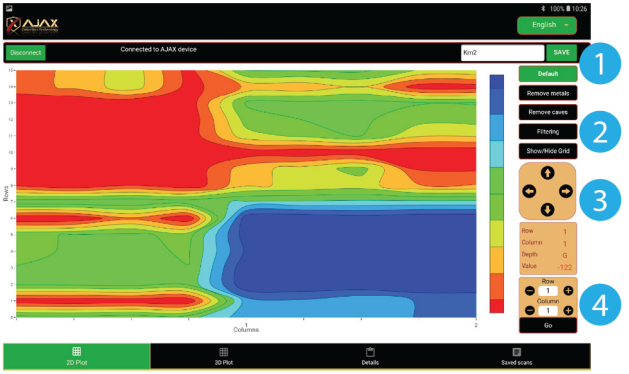

3D Ground Scan

The 3D plot shows a three-dimensional surface representing the scan data values.

Different views can be selected from the right, as filtering out metals or caves values.

Swipe over the surface for a custom viewing angle.

Details show the scan information including the scan parameters selected by the device, scan date, scan direction, overview of the values and the scan location.

The scan location is not stored by default.

To store the location of the scan, enable the location services from the settings in the tablet and tap on Show/Refresh current location.

Saved Scans shows a list of the stored scanned for review and analysis.

The Tablet Scan is identical to the Device scan but features an easier interface with a clearer representation and enable the user to scan a larger area of ground.

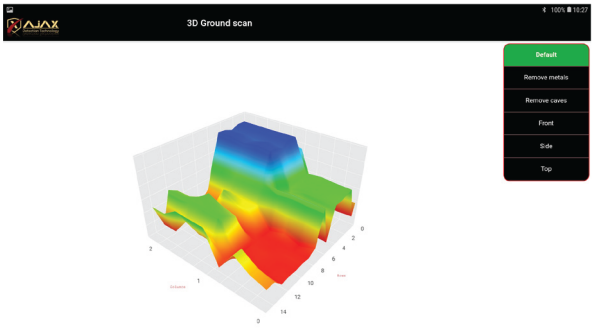

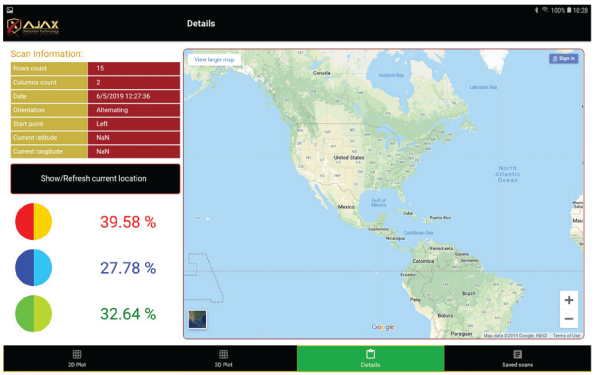

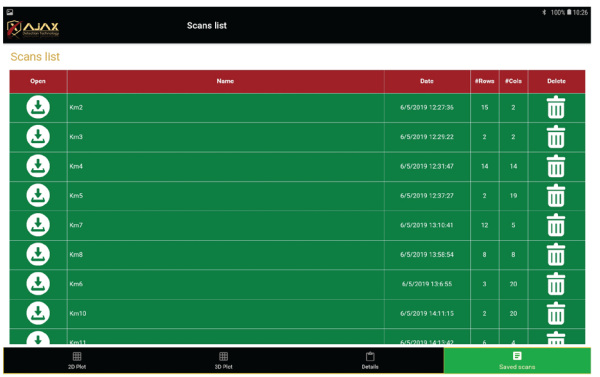

Select Gradio Smart from the Main Menu and press OK to enter the Gradio Smart search system interface.
Make sure that the device is assembled as in *"figure 3 -Gradio Smart Assembly" on page 17*.

A balancing operation is required before the start of the search in order to nullify external environmental factors.

To perform a balance, point the device towards the ground then press and hold the grip key, while pressing the grip key move over the scan area in a random fashion until the progress bar on the display is filled.
Keep the distance from the tip of the device to the ground surface a 10-15 cm (4-6 in) throughout the whole balance operation.

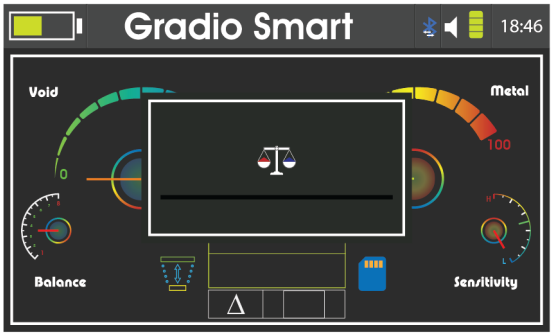

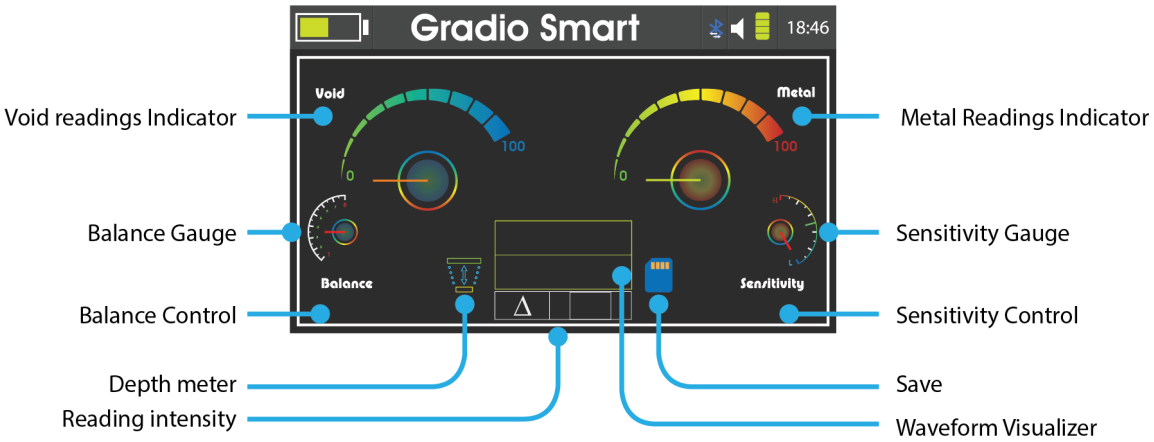
Gradio Smart
18:46
Void
Metal
0
100
0
100
Balance
Sensitivity
Void readings Indicator
Balance Gauge
Balance Control
Depth meter
Reading intensity
Metal Readings Indicator
Sensitivity Gauge
Sensitivity Control
Save
Waveform Visualizer

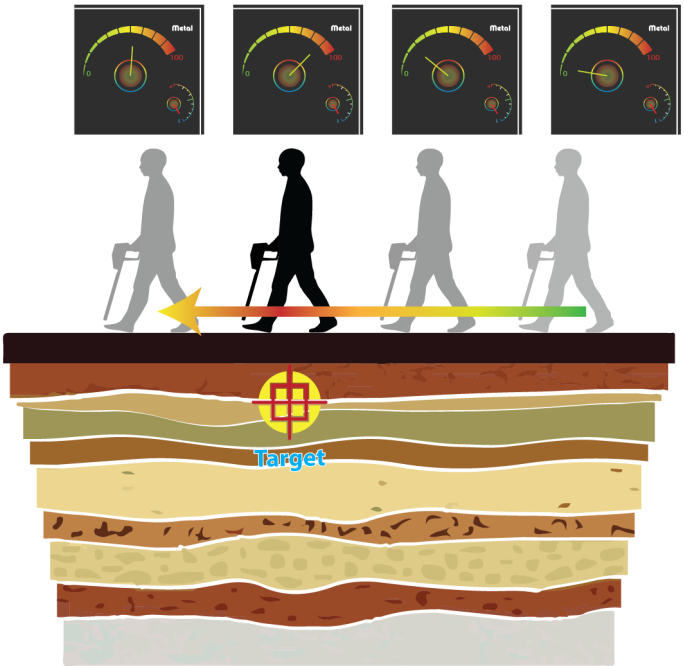

After performing the balance operation, move over the scan area while maintaining an equal distance between the tip of the device and the ground.
While moving over the scan area track the changes on the display in indicator levels and reading intensity to enclose targets.

Change the sensitivity or balance to fine-tune the device to meet the desired configuration.

Once the target point is acquired, select depth meter and press OK.

Stand over the target and point the device towards the ground, then press the grip key and steadily walk away from the target point.

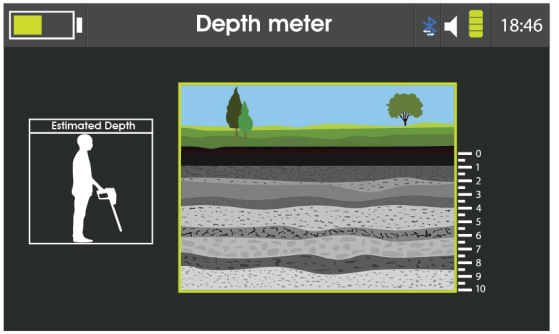

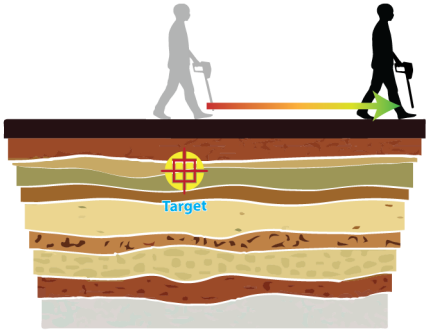

Once the depth measurement is done the device will display the result on the screen.

In case of a failed attempt, go back to target point and repeat the procedure again.

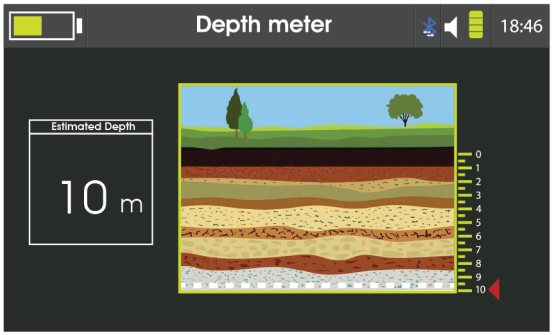

Live Scan

To enter the Live Scan search system interface, select Live Scan icon from the Main Menu and press OK .
Make sure that the device is assembled as in "figure 3 -Gradio Smart Assembly" on page 17 for using the Gradio Smart sensor, or as in *"figure 2 -Imaging Scanner Assembly" on page 15* for using the Imaging Scanner.

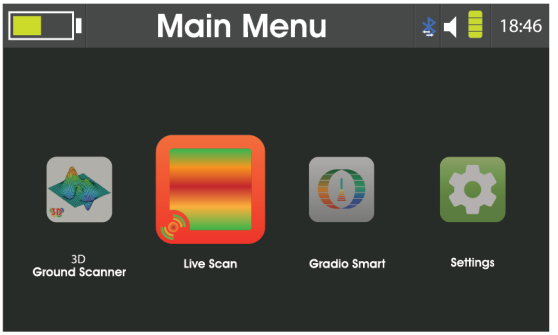

Imaging Scanner mode:
A balancing operation is required before the start of the search in order to nullify external environmental factors.
Refer to page (32) for info.

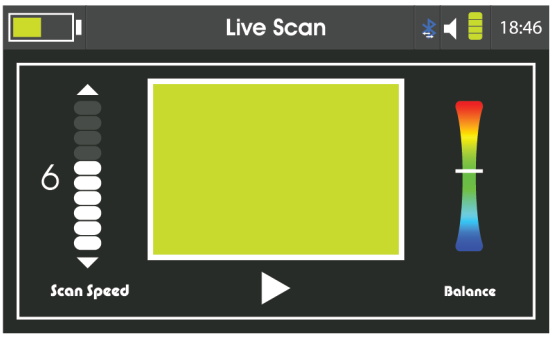

After performing the balance operation, move over the scan area while maintaining an equal distance between the bottom of the imaging scanner and the ground.

Press the grip key to pause and resume the scan. The scan speed can be adjusted by the bar on the left to 10 different values.

For further adjustment the balance can be fine-tuned to nullify undesired spectrum.

Live Scan system can show the results on AJAX visualization software. To see the live feed on the tablet just make sure that Bluetooth is turned on for both devices.
Select Live Scan on AJAX software. No more configuration is required.

Gradio Smart mode:
A balancing operation is required before the start of the search in order to nullify external environmental factors.

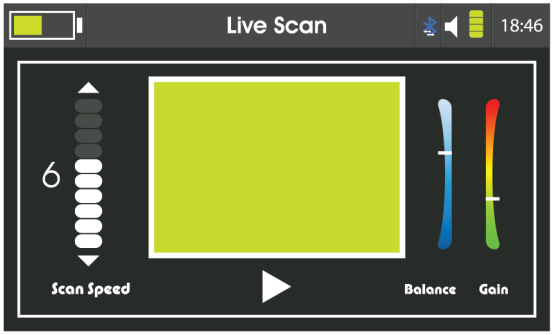

After performing the balance operation, move over the scan area while maintaining an equal distance between the tip of the device and the ground.

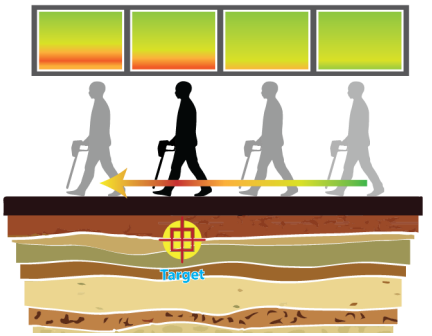

Press the grip key to pause and resume the scan. The scan speed can be adjusted by the bar on the left to 10 different values.

For defining a specified spectrum adjust Balance and Gain to get the desired spectrum required for the search requirements.

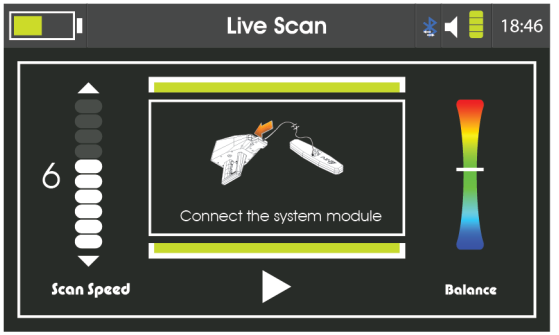

A message will prompt the user to connect one of the search modules in case no search module was connected.
The device will go into Imaging Scanner or Gradio Smart mode according to the connected module.

Charging the battery

Charge the battery before using it for the first time or when it has been unused for extended periods.
Use only AJAX-approved chargers, batteries, and cables.
Unapproved chargers or cables can cause the battery to explode or damage the device.

• Connecting the charger improperly may cause serious damage to the device.

Any damage caused by misuse is not covered by the warranty.

• Use only cable supplied with the device. The device may be damaged if you use different cable.

To save energy, unplug the charger when not in use.
The charger does not have a power switch, so you must unplug the charger from the electric socket when not in use to avoid wasting power.
The charger should remain close to the electric socket and easily accessible while charging.

1 Plug the DC cable into the device's Charge jack.

2 Plug the power adapter into an electric socket.

3 After fully charging, disconnect the charger from the device.
Then, unplug the charger from the electric socket.

Precautions for operating environment

Your device may heat up due to the environment in the following conditions.
Use caution to avoid shortening the battery's lifespan, damaging the device, or causing a fire.

• Do not store your device in very cold or very hot temperatures.

• Do not expose your device to direct sunlight for extended periods.

• Do not use or store your device for extended periods in very hot areas, such as inside a car in the summertime.

• Do not place the device in any areas that may overheat, such as on an electric heating mat.

• Do not store your device near or in heaters, microwaves, hot cooking equipment, or high pressure containers.

• Never use a damaged charger or battery.

Battery charging tips and precautions

- When the battery power is low, the battery icon appears empty.
- If the battery is completely discharged, the device cannot be turned on immediately when the charger is connected. Allow a depleted battery to charge for a few minutes before turning on the device.
- The device can be used while it is charging, but it may take longer to fully charge the battery.
- If the device receives an unstable power supply while charging, the device may not function. If this happens, unplug the charger from the device.
- While charging, the device and the charger may heat up. This is normal and should not affect the device's lifespan or performance. If the battery gets hotter than usual, the charger may stop charging.
- If the device is not charging properly, take the device and the charger to AJAX or an AJAX Authorized Service Centre.

Contact Information

AJAX DETECTION TECHNOLOGY LTD.

Address	1201 N.W. Briarcliff Parkway, 2nd Floor, Kansas City, Missouri, 64116 USA
Telephone	+1 816 298 0485 +1 816 399 3744
E-mail	info@ajaxdetection.com
Web site	http://www.ajaxdetctioncom

NOTE:

WEEE (Waste Electrical and Electronic Equipment) Statement

To protect the global environment and as an environmentalist, AJAX must remind you that... Under the European Union ("EU") Directive on Waste Electrical and Electronic Equipment, Directive 2002/96/EC, which takes effect on August 13, 2005, products of "electrical and electronic equipment" cannot be discarded as municipal waste anymore, and manufacturers of covered electronic equipment will be obligated to take back such product at the end of their useful life. AJAX will comply with the product take back requirements at the end of life of AJAX-branded products that are sold into the EU. You can return theses products to local collection points.

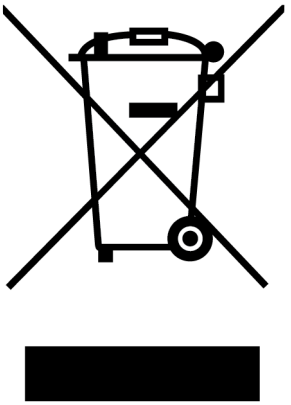

Environmental Policy
The product has been designed to enable proper reuse of parts and recycling and should not be thrown away at its end of life.
Users should contact the local authorized point of collection for recycling and disposing of their end-of-life products.
Visit the AJAX website and locate a nearby distributor for further recycling information.
Users may also reach us at <envo@ajaxdetctor.com> for information regarding proper Disposal, Take-back, Recycling, and Disassembly of AJAX products.

WEEE (Waste Electrical and Electronic Equipment) Statement

European Union:

Batteries, battery packs, and accumulators should not be disposed of as unsorted household waste. Please use the public collection system to return, recycle, or treat them in compliance with the local regulations.

Taiwan:

廢電池請回收

For better environmental protection, waste batteries should be collected separately for recycling or special disposal.

California, USA:

The button cell and Li-ion battery may contain perchlorate material and requires special handling when recycled or disposed of in California.

For further information please visit:
http://www.dtsc.ca.gov/hazardouswaste/perchlorate/

SHOP DETECTORS
TEL : +1 206-401-9788
WEB : https://shopdetectors.com/
EMAIL : contact@shopdetectors.com

AJAX
DETECTION TECHNOLOGY
www.ajaxdetector.com